PMM 1500M

0–220 rpm

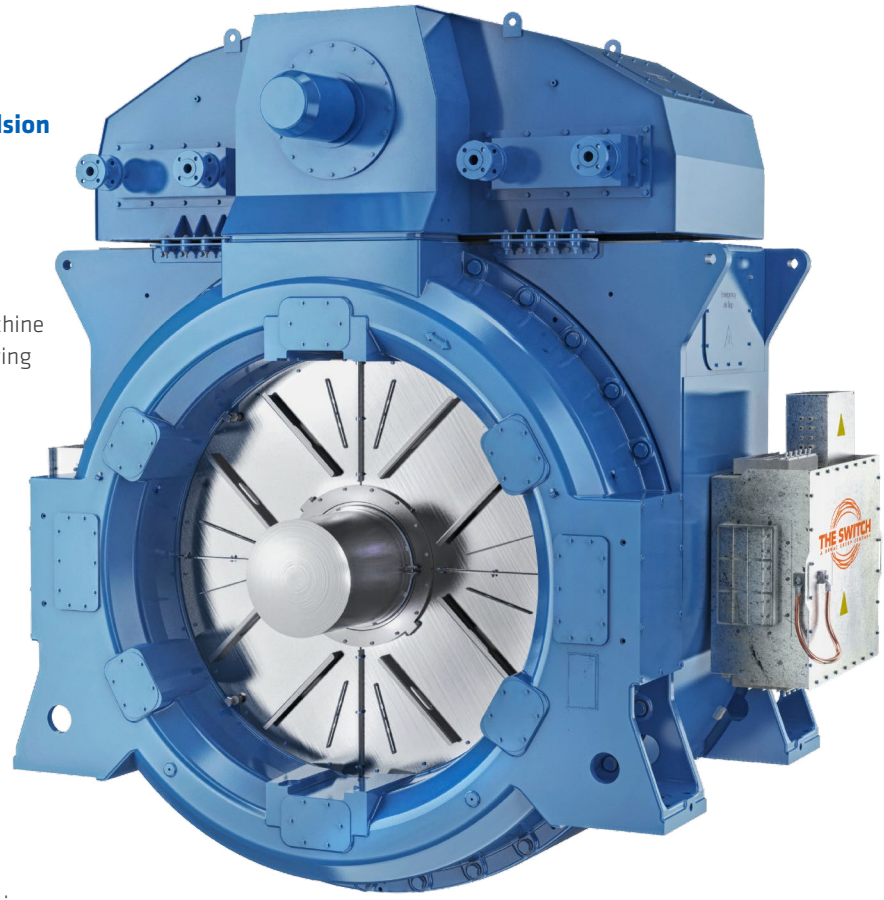

Designed and built for shaft generator and propulsion motor applications

For various vessel types, such as container vessels, LNG carriers, product tankers and more.

- 100% designed for marine applications
- Brushless permanent magnet (PM) synchronous machine
- High efficiency, reducing fuel consumption and lowering emissions
- Compact and lightweight design
- Easy to install
- Low operating costs
- Built according to international standards
- Certificates from leading classification societies worldwide

Always tailored to application-specific requirements by adjusting:

- Speed range
- Cooling
- Voltage
- Machine length based on torque
- Other key parameters

Each machine is comprehensively tested in our own testing facilities before delivery.

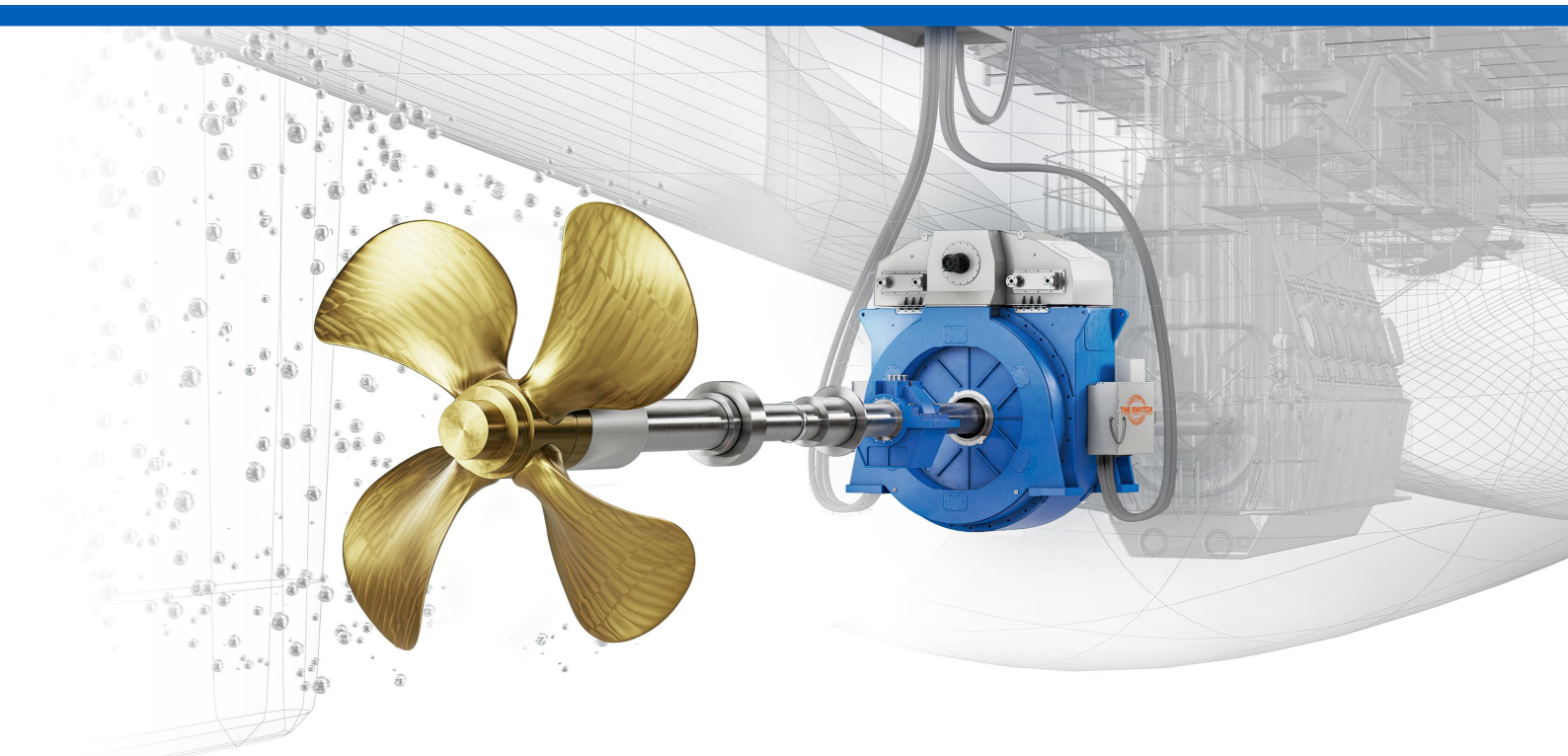

Permanent magnet machine | Frame 1500M

Technical data [1]

Frame	1500M								1500M							
	7	8	9	10	11	12	13	14	15	16	17	18	19	20	21	22
Max. continuous torque [kNm]	198	226	255	283	312	340	368	397	425	453	481	510	538	566	595	623
Shaft center height [mm]	1,360								1,360							
Continuous speed range [rpm]	0–220								0–220							
Stator winding type	2-layer form-wound diamond coil winding with mica insulation								2-layer form-wound diamond coil winding with mica insulation							
Max. momentary torque [% of nominal]	130								130							
Machine mass excluding shaft or bearings [t]	18.1	19.0	19.9	20.8	21.7	22.6	23.5	24.9	25.9	26.8	27.8	28.7	29.7	30.6	31.6	32.5
Rotor mass excluding shaft or bearings [t]	2.5	2.8	3	3.2	3.4	3.7	3.9	4.6	4.8	5.1	5.4	5.6	5.9	6.2	6.4	6.7
Rotor inertia excluding shaft or bearings [kgm^2]	1,902	2,092	2,281	2,471	2,660	2,850	3,039	3,671	3,875	4,078	4,282	4,486	4,689	4,893	5,096	5,300
Protection class [2]	IP44								IP44							
Cooling type	IC8A6W7 (Forced air cooling with external air-to-liquid heat exchanger)								IC8A6W7 (Forced air cooling with external air-to-liquid heat exchanger)							
Number of poles	32								32							
Nominal voltage [V] [3]	450/500/690								450/500/690							
Max. ambient temperature [°C]	45								45							
Max. cooling liquid temperature [°C]	38								38							
Insulation class [4]	155								155							
Thermal class	155								155							

[1] Numbers shown here are subject to change depending on project-specific requirements
[2] Higher class optional, [3] Medium voltage optional, [4] 180 class optional

Features	Main benefits
Excitation with Neodymium magnets	- Excellent efficiency, especially at part loads - Brushless, no slip rings needed, no wearing parts - No external exciters needed - No automatic voltage regulator (AVR) needed - Low rotor weight and inertia - In generator mode, possible to start from blackout - Very low vibration levels
Form-wound, mica-insulated winding impregnated with global VPI	- Best possible protection against mechanical vibrations, chemical corrosion and electrical surges - Proven technology with a solid track record in marine - Easily scalable up to medium voltages
Control with frequency converter	- Variable speed operation, decouples the machine rotation speed from grid's voltage and frequency - Maximized system efficiency - In shaft generator applications, both PTI and PTO modes available - Full torque available starting from zero speed - Momentary overloading for clearing ice loads, foreign parts on the propeller or other
Protection class IP44	- Closed system, no external particles or dirt can enter the machine
Compact machine	- Design optimized for each delivery project using proven technology and product platform - Short machine because external rotor excitation is unnecessary

Features	Main benefits
Redundancy	- With dual winding machine, possibility to safely operate the machine with reduced power in case of converter failure - Possible to operate the machine on reduced power with one cooling fan out of order
Rotor	- In shaft generator applications, it is possible to decouple the rotor from the propulsion shaft line in less than 3 hours - Low-inertia design compared to other generator technologies and even permanent magnet solutions
Flexible design	- Variable machine torque by varying length (number of substacks) - Modular design allows customization - Cable interfaces in different directions in terminal boxes - Interchangeable main and star-point terminal boxes - Optional terminal boxes on the machine end
Easy and fast installation	- Common bearings with propulsion shaft line - Rotor inserted in stator for transport - Easily accessible terminal boxes - HEX rubber bellow expansion joints - New eccentricity adjustment method with dial indicators
Low operating expenses	- High efficiency, lower fuel consumption - Simple, robust and reliable machine - Less maintenance - No bearings, rotor windings, slip rings, exciters or automatic voltage regulators (AVRs)

Typical efficiencies of The Switch PMM at various speeds and load levels

This chart illustrates typical efficiencies vs speed at different load levels, taking into account external cooling fan power consumption.

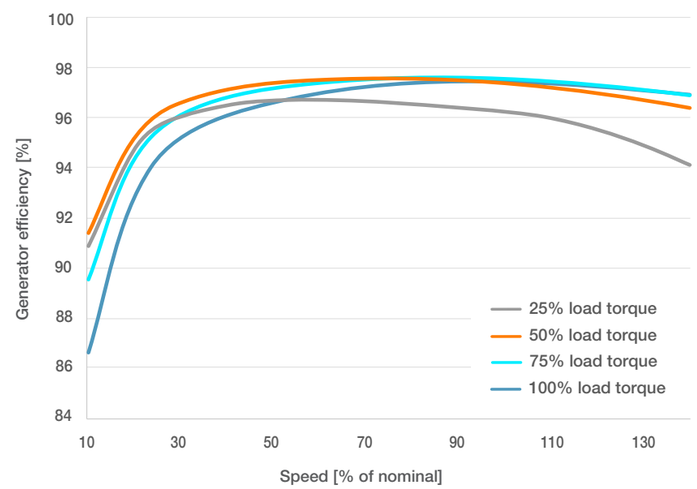

The exact efficiency value depends on the nominal speed of the application.

© The Switch

Technical drawings

The dimensions below are for a shaft generator without bearings or shaft. Ask about dimensions for the propulsion motor version, as they vary according to customer requirements.

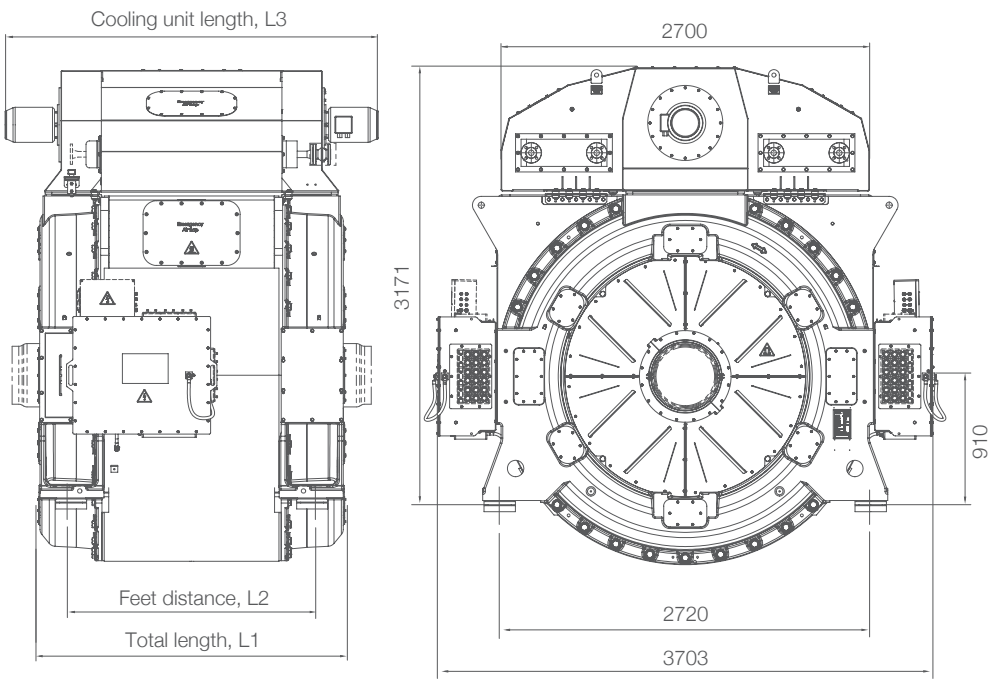

Machine dimensions

Frame	1500M							
	7	8	9	10	11	12	13	14
Total length, L1 [mm]	1,647	1,727	1,807	1,887	1,967	2,047	2,127	2,206
Feet distance, L2 [mm]	1,149	1,229	1,309	1,389	1,469	1,549	1,629	1,708
Cooling unit length, L3 [mm]	2,128	2,208	2,287	2,368	2,448	2,527	2,607	2,687

Frame	1500M							
	15	16	17	18	19	20	21	22
Total length, L1 [mm]	2,286	2,366	2,446	2,526	2,606	2,686	2,766	2,846
Feet distance, L2 [mm]	1,788	1,868	1,948	2,028	2,108	2,188	2,268	2,348
Cooling unit length, L3 [mm]	2,768	2,847	2,927	3,007	3,087	3,167	3,247	3,327

Direct-drive propulsion

The Switch permanent magnet machine (PMM) can be used as a direct-drive propulsion motor in a standard configuration with its own bearings. Alternatively, it can be used as a novel concept, utilizing the common bearings between the propulsion shaft and the motor. A tandem setup is also possible on request.

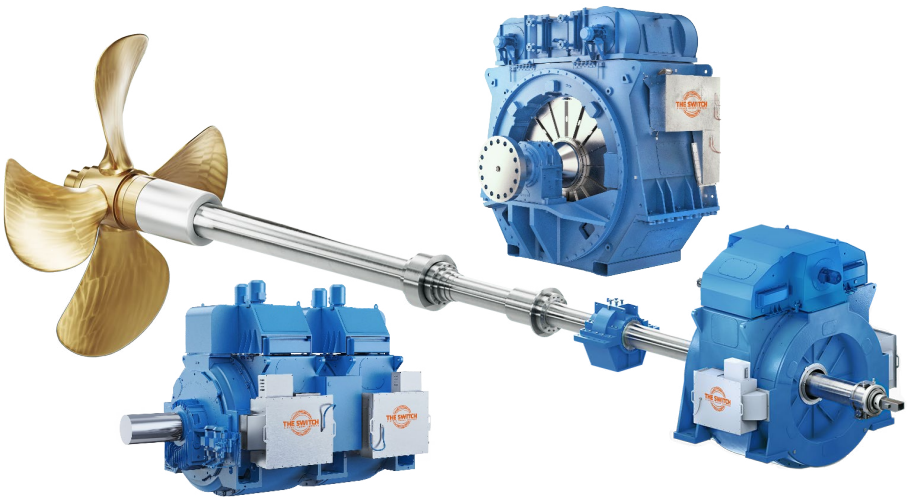

Version 3, 8/2026

© The Switch

We reserve the right to modify the information above at any time without notice